WEST SIDE PLACE

FOCUSED FACILITIES MANAGEMENT
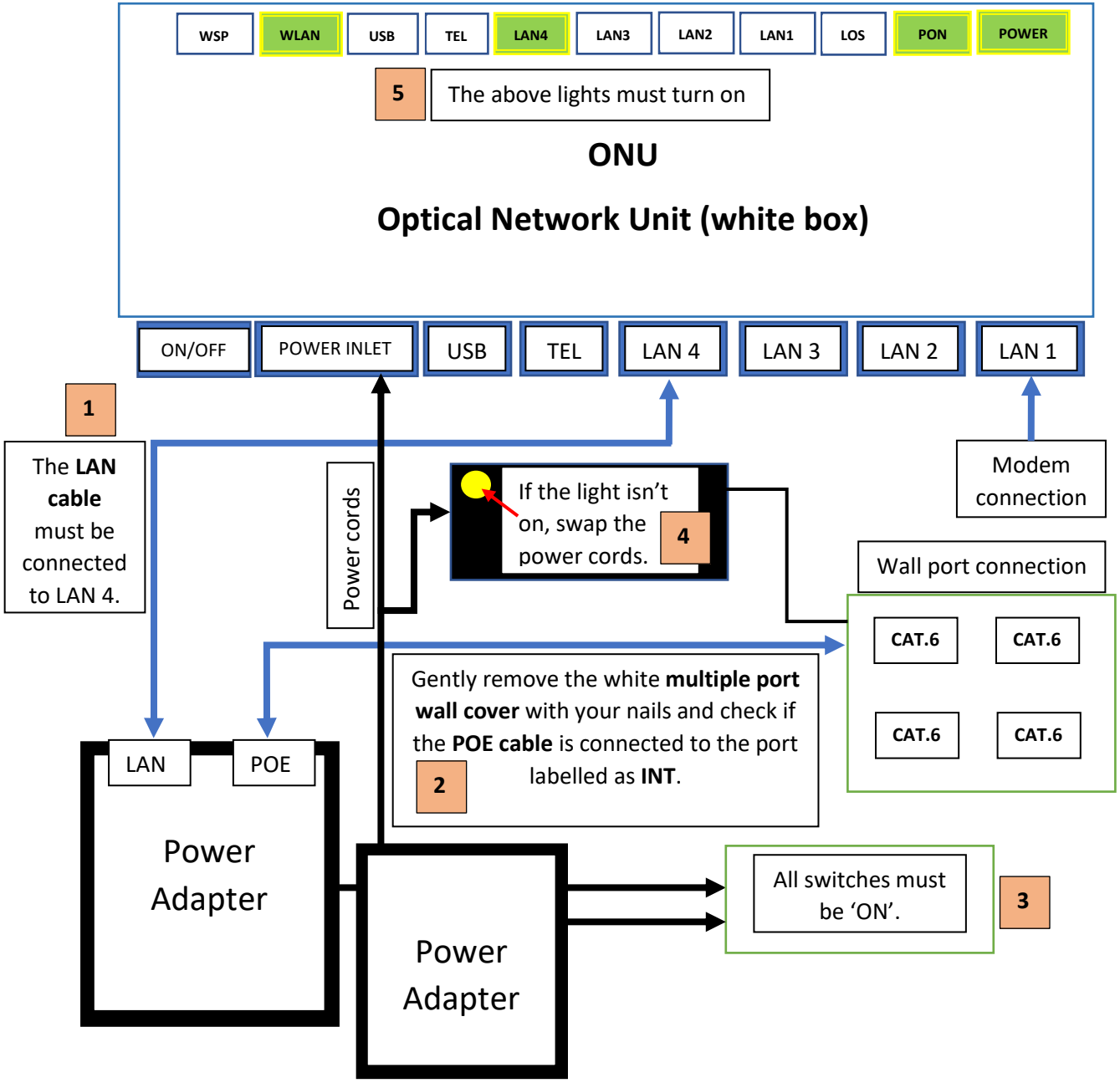
Intercom Troubleshooting Guide